Army Public School, Dighi
C/o TB II, BEG & Centre
Dighi Camp, Pune-15

5001/APSD/Benches/2023-24

07 Oct 2024

_____
_____
_____

CALL FOR QUOTATION FOR PURCHASE OF BENCHES

Sir,

1. Please forward quotation for the under mentioned items at the above address so as to reach the undersigned by 09 Oct **2024**.

S No	Description	A/U	Qty	Rate (inclusive of charges)	Total Amount
a)	Dual Desk Size 33.5"Wx27"Hx24"D other sizes as per Sample & sketch **Table TOP** -Providing table top in 18mm thick commercial plywood & lipping patti with laminate **Modesty** - Providing half front perforated modesty With powder coating **Structure** -Providing bench framing in metal with powder coating	Nos	50		
b)	Dual Desk Size 37"Wx30"Hx31"D other sizes as per Sample & sketch **Table TOP** -Providing table top in 18mm thick commercial plywood & lipping patti with laminate **Modesty** - Providing half front perforated modesty With powder coating **Structure** -Providing bench framing in metal with powder coating	Nos	50		
	Sub Total				
	GST %				
	Total/Round off				
Amount in words					

Terms & Conditions:-

2. **Contractor are advised to visit the site before quoting rates, No representation will be accepted post submission of quotes.**
3. Quotation should be in a sealed envelope outside of the envelop, the reference of this office enquiry date and time for opening name and address of your firm should clearly be marked.
4. 1ST Envelope contains the Tech Bid - Firm Registration/Shop Act, GST Registration, PAN Card, NEFT Details.
5. 2ND Envelope contain the Financial Bid - Rates will be quoted as per given accounting sheet.
6. Any alternate / deletion made must be attested by your signatory and failure to do so will made the quotation liable for rejection.
7. Any direct / indirect attempt for negotiation will reject the quotation.
8. Any quotation not fulfilling above conditions or incomplete in any respect will be rejected.
9. Product should be 2023 manufactured, preferably.
10. Rate should be valid minimum 3 months.

Rebate/ discount if any should be clearly mentioned and rate should be quoted both in figures and words.

11. **Payment will be made after completion of work alongwith Firm Bill with GST, bank details & PAN Card Xerox.**
12. **There is no advance payment system.**

(Mrs Kavita Kadam)
Principal
Army Public School Dighi

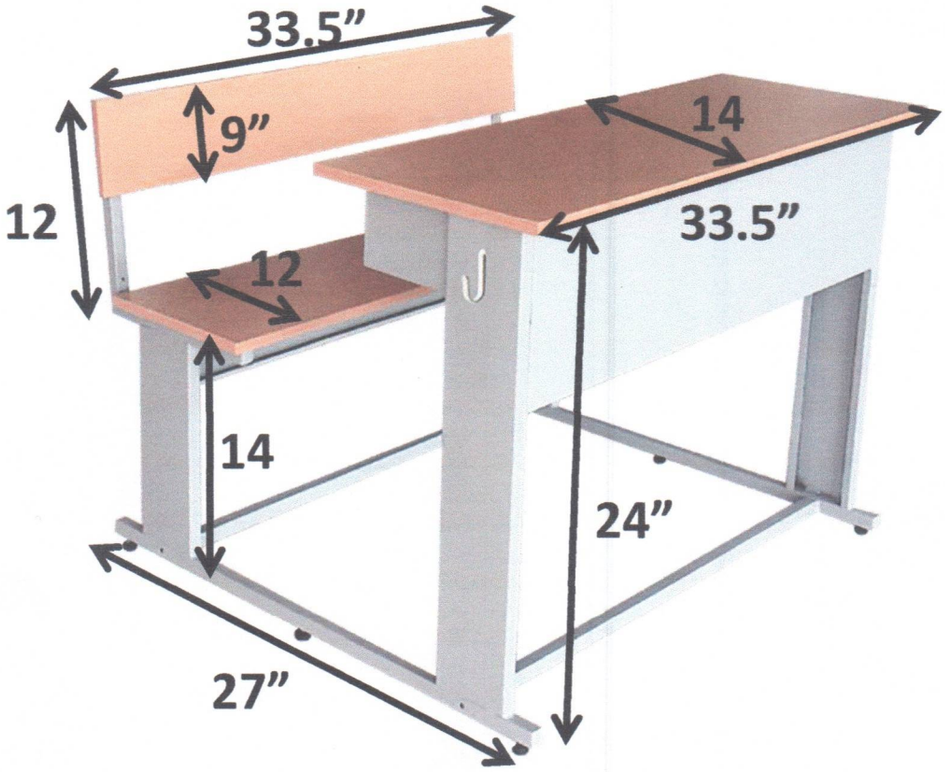
33.5”
9”
14
12
33.5”
12
14
24”
27”

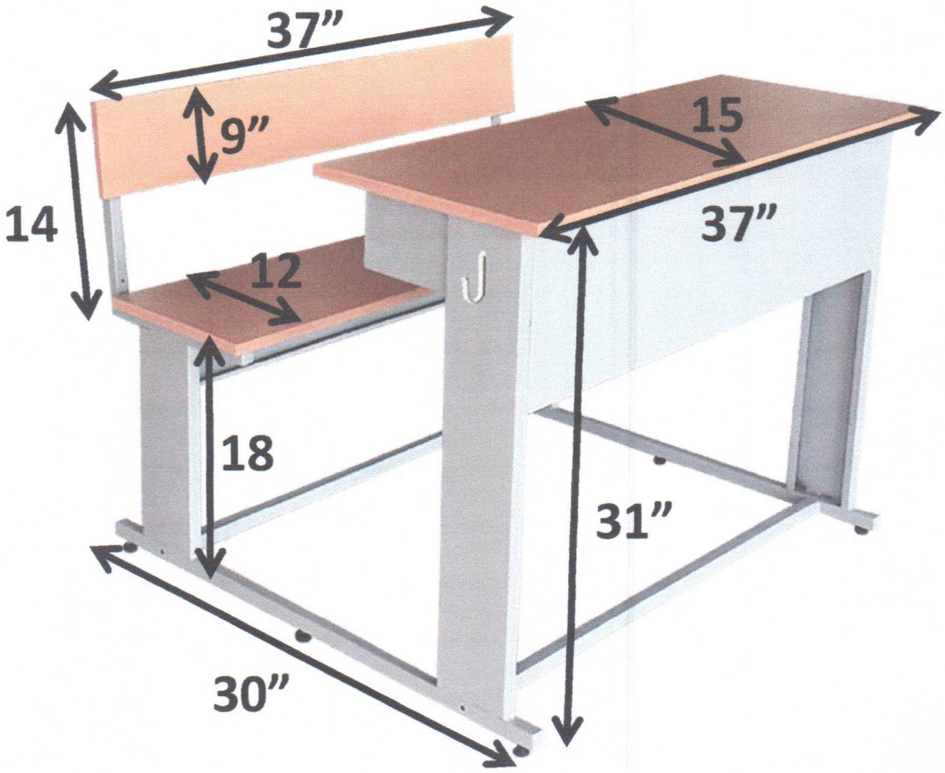
37”
9”
15
14
37”
12
18
31”
30”